L300

Modular Lining system, SBR / NR

DESCRIPTION

Less noise – better health
L300 reduces noise levels by 40–75% compared to traditional steel linings, helping protect workers from hearing damage.

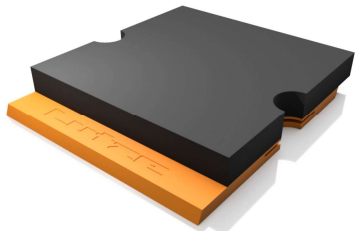

Lightweight and easy to replace
The modular system uses small 3–5 kg panels instead of heavy plates. When worn, only the affected module needs to be replaced. This saves time, reduces costs, and lowers the risk of injury.

Stronger and more durable
L300 delivers up to **30% better wear performance** than traditional systems, providing longer service life and fewer replacements.

Environmentally friendly and fully recyclable
L300 contains no fabric or steel and is completely recyclable. This makes it a more sustainable choice and gives your operation a clear environmental advantage.

Safer work – no hazardous operations
Modules can be cut with a knife or Alu-Cut machine without producing smoke or harmful emissions. No welding is required, which further improves workplace safety.

The integrated **signal color provides a clear visual indication of wear**, showing when a module is worn and needs to be replaced or is approaching the end of its service life. The signal color is clearly visible from a distance, allowing operators to identify worn modules **without having to crawl into the machine or enter potentially hazardous areas**. This reduces the need for close-up inspections and helps minimize the risk of injury during maintenance.

TECHNICAL DATA

	Value / Tolerance		Unit	Standard
L300 DIMENSIONS				
Length	**345/300**	+2/-0	mm	-
Width	**300**	+2/-0	mm	-
Total thickness	**30 / 40 / 50**	± 1	mm	-
Total panel weight	**3,1 / 4,2 / 5,2**		Kg	-

LUTZE GROUP
Hullerser Landstraße 37, 37574 Einbeck
www.lutze-group.com
E-Mail: Products@lutze-group.com
Stand: 05/2026 ARo

L300 PROPERTIES (Top Layer)

Polymer Basis		**SBR / NR**			
Density	min.	**1,11**	± 0,05	g/cm³	ISO 1183
Abrasion resistance (10 N)	max.	**90**		mm³	ISO 4649
Hardness		**60**	± 5	Shore A	ISO 7619-1
Tensile strength	min.	**18**		MPa	ISO 37
Elongation at break	min.	**450**		%	ISO 37
Temperature range	Min./ Max	**-20 / +70**		°C	
Color	-	**Black**			

L300 PROPERTIES (Signal Layer)

Polymer Basis		**SBR / NR**			
Density	min.	**1,11**	± 0,05	g/cm³	ISO 1183
Abrasion resistance (10 N)	max.	**120**		mm³	ISO 4649
Hardness		**60**	± 5	Shore A	ISO 7619-1
Tensile strength	min.	**20**		MPa	ISO 37
Elongation at break	min.	**450**		%	ISO 37
Temperature range	Min./ Max	**-20 / +70**		°C	
Color	-	**Orange**			

Property	Resistance / 1 - 5	Rating
Ozone	**1 / 5**	Poor
Dilute Acids	**3 / 5**	Fair
Water	**4 / 5**	Good
Oil & Greases	**1 / 5**	Poor
Sunlight / UV	**2 / 5**	Poor / Limited
Abrasion	**5 / 5**	Excellent
Mechanical Strength	**5 / 5**	Excellent

Working area



Wear resistance for demanding applications exposed to both impact and sliding wear, while also helping to reduce noise levels. Optimal performance is achieved at impact angles of approximately 90°.

Designed for medium- to light duty applications involving crushed, sharp-edged materials in mining, quarries, sand and gravel operations, and recycling plants.

Typical applications include bunkers, chutes, loading points, feeders, hoppers, mobile crushing and screening plants.

Assembly of L300

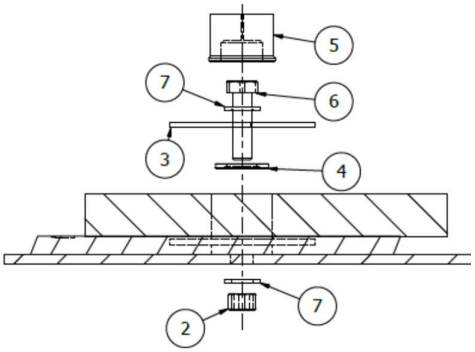

1. Crecent Key
2. Locking Nut (Max M16)
3. Crecent Washer
4. Washer 25x44x4
5. PU-Plug D50 mm
6. Bult (Max. M16)
7. Washer



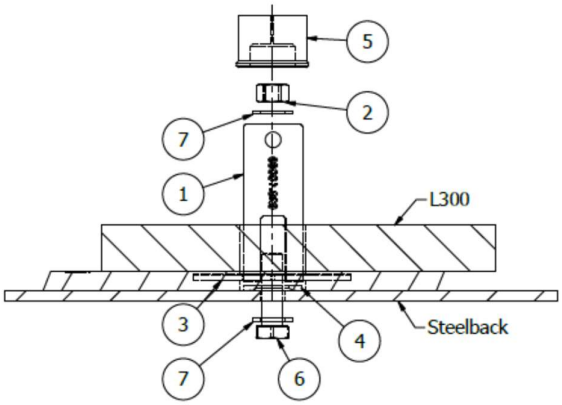

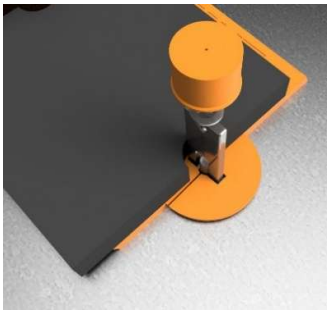

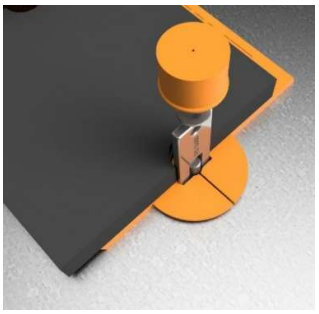

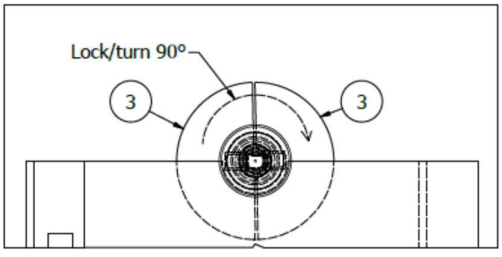

Use Crecent Key (1) (Assembly tool) to lock the Crecent Washers.

IMPORTANT!
Remember to place the **4 mm thick washer (4)** underneath the Crescent Washers. This will help prevent damage to the rubber of the L300.



LUTZE GROUP
Hullerser Landstraße 37, 37574 Einbeck
www.lutze-group.com
E-Mail: Products@lutze-group.com